PRODUCT DATASHEET	CODE - CI-65-617RG	CAST IRON GRATES	Issue	Date	Description	Name
			A	19.5.2016	Detail Drawn	MP

3 CASTING ARRAYED

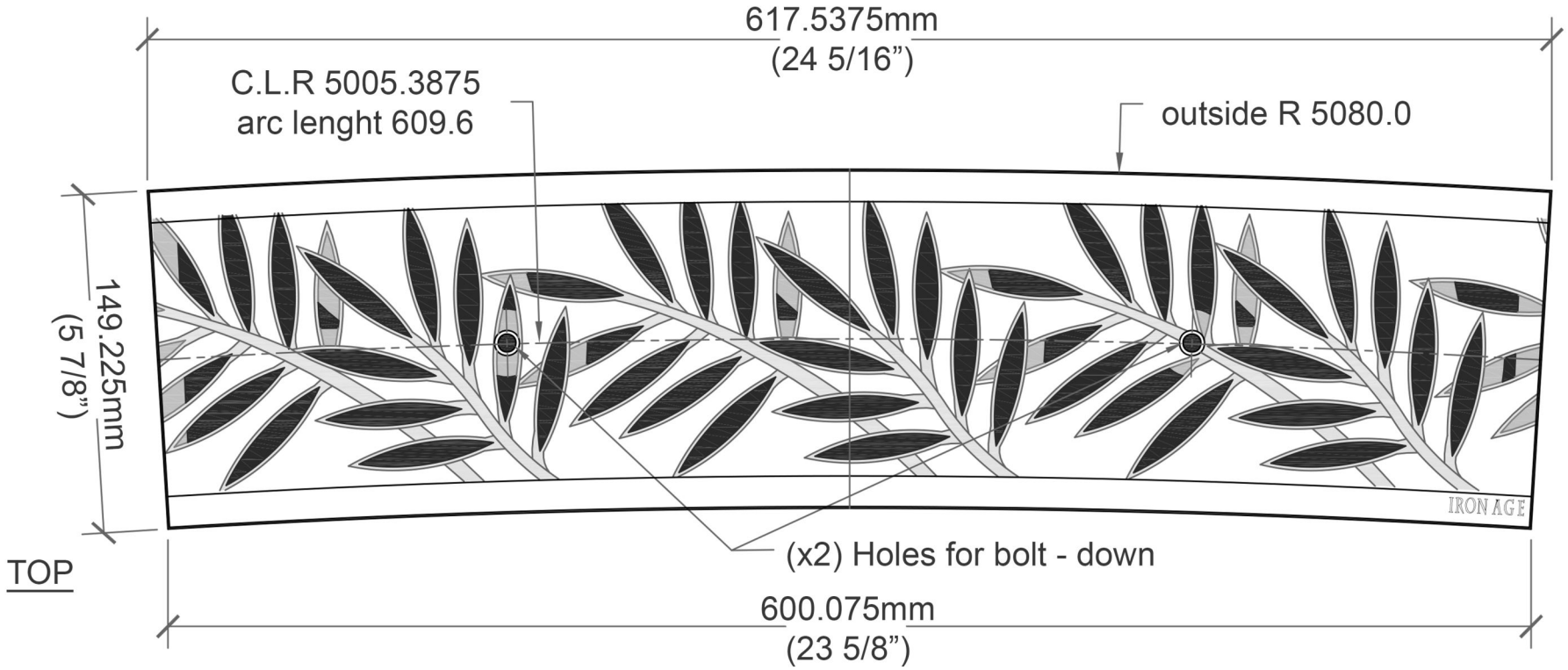

IRON AGE DESIGNS www.ironagegrates.co.uk	Pattern : Locust	Material : Cast Iron	Locust 617mm Curved Grate Locust 6"trench cover O.R.16'-8"
	Finish : Natural	Thickness : 19.05	Drawing no : LOC-RG-617 / Product no :CI-65-617RG
1. Due to casting inconsistencies all dimensions are nominal 2. No openings greater than 12.7 mm 3. Please discuss about channel drain options	Dimensions : 617,5375 x 149,225	Units : mm	LATERAL DESIGN STUDIO www.lateraldesignstudio.co.uk
	Load Class : N/A	Flow rate : 15%	Unit 5 Cotswold Business Park Millfield Lane Beds LU1 4AJ

Copyright 2011-2016 Lateral Design Studio Limited. This drawing and subject matter disclosed therein, embody proprietary information which is the confidential property of Lateral Design Studio Ltd, none of which shall be copied, reproduced, disclosed to others, published or used, in whole or in part, without the express advanced written permission of a duly authorised agent of the company. This drawing is subject to recall by Lateral Design Studio Ltd.

ACID ANTI COPYING IN DESIGN

info@lateraldesignstudio.co.uk
0208 450 2244